REVISIONS					
REV	ECO	DESCRIPTIONS	DWN	CKD	APVD
A	~	ORIGINATED FOR ECO CONTROL	DHB 7-13-94		
B	01801	CHANGE PER ECO	WCR 8/25/95		

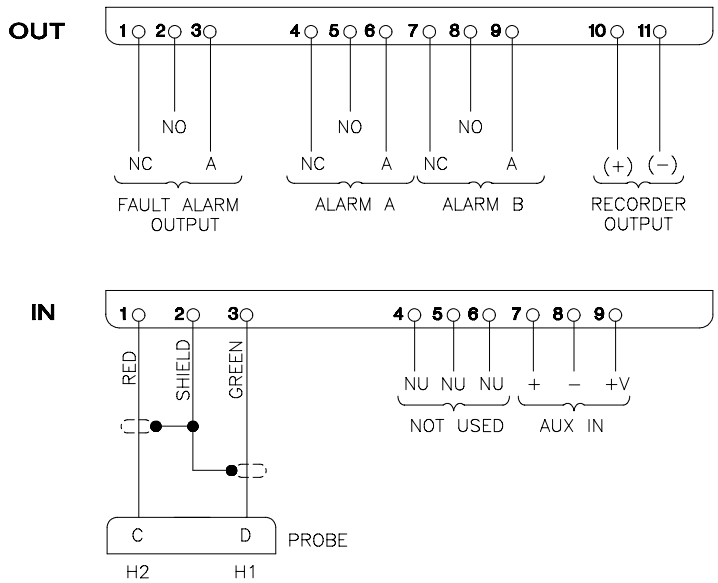

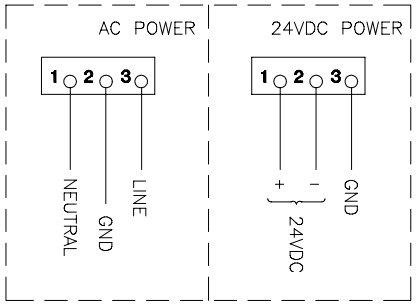

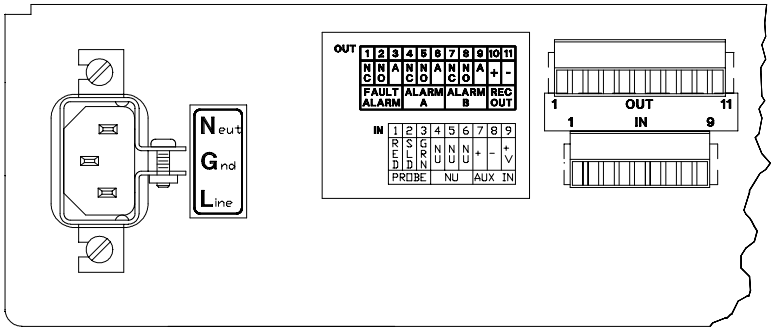

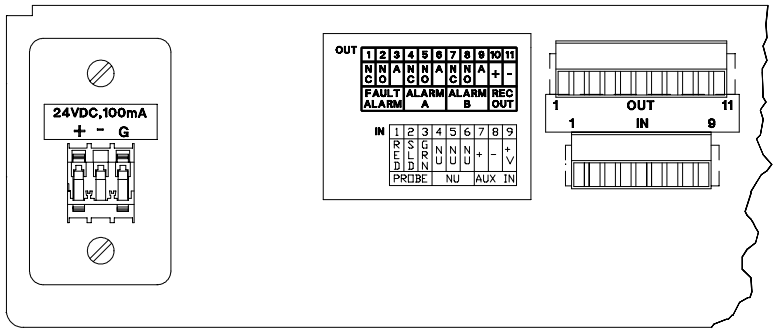

UNLESS OTHERWISE SPECIFIED
DIMENSIONS ARE IN INCHES
TOLERANCES ARE
FRACTIONS ± ~ DECIMALS .XX ± .XXX ± ANGLES ±

DRAWN 7-13-94 D.BREZNER | ENGINEER
CHECKED
RN 3002
MODEL NO. MMS35

REV	ECO
B	01801
A	~

PANAMETRICS
WALTHAM, MASS. 02154-3497

TITLE
INTERCONNECTION DIAGRAM RACK & PANEL MOUNT

SIZE C | DRAWING NUMBER 702-176 | REV B
SCALE NONE | DO NOT SCALE DWG | SHEET 1 OF 1